MAGSWITCH PLAY50X3 2.0
P/N: 81401521
+ 1(303) 468.0662
magswitch.com

PLAY50X3 2.0 | P/N: 81401521

Summary

The Magswitch 2.0 LAY-series of magnetic grippers for robotic automation utilize magnets arranged in a linear array to extend the depth and footprint of the magnetic field. The larger footprint of the array magnets provide stability for large end effectors and workpieces. With the ability to add custom pole shoes, the LAY magnets can be used with many different part profiles. The LAY 2.0 tools are strong, robust, and a perfect material handling solution for handling pipe, tubes and plate steel.

Specifications

Maximum Breakaway Force [1,2,4]	6722	N		
Maximum Shear [1,2,4]	1716	N		
Minimum Thickness for De-Stack [3]	0.5	in	12.7	mm
Overall Height (Max)	10.0	in	254.8	mm
Overall Length	8.1	in	205.9	mm
Overall Width	3.9	in	98.3	mm
Net Weight	19.84	lbs	9.0	kg
Magnetic Pole Footprint	2.8x7.17	in	71.1x182.0	mm
Max Allowable Pressure	145	psi	1.00	MPa
Air Port Threads	Rc 1/4			



Material Thickness - mm (in)	1.5 (0.059)	1.9 (0.075)	2.7 (0.106)	3 (0.118)	3.5 (0.138)	4.76 (0.187)	6.35 (0.250)	9.53 (0.375)	12.7 (0.500)	19.05 (0.750)	50 (1.969)
Maximum Force [5] (N)	1017	1393	1796	2006	2336	3470	4731	6116	6416	6720	6722
Required Air Pressure - bar (psi)	3.1 (45)	2.8 (40)	2.6 (38)	2.4 (35)	2.4 (35)	2.1 (30)	2.1 (30)	1.9 (28)	1.9 (28)	1.7 (25)	1.7 (25)

[1] Determined in laboratory environment on 2" thick SAE1018 Steel with surface roughness 63 micro inches. Many factors contribute to the actual breakaway force and safe working load in each application. Consult a Magswitch Applications Engineer and test the Magswitch in each application before deployment.

[2] All data applies to standard tool.

[3] Determined with SAE1018 Steel L=200mm W=200mm.

[4] Values may vary by +/- 5%.

[5] Maximum forces listed above are not safe lifting forces. Designer must take into account safety factor when specifying tool. Magswitch recommends SWL = 5:1 for most applications.

$$SWL\ (Safe\ Working\ Load) = \frac{Maximum\ Force^{5}}{Safety\ Factor\ (\geq 5)}$$

Pole shoes required for operation

Standard kits available:

Flat Pole Shoe Kit (Included)	88001716
135Deg V Pole Shoe Kit	88001717
155Deg V Pole Shoe Kit	88001718
Flat w/ Teeth Pole Shoe Kit	88001719

WARNING!
Do Not Operate Unless In Contact With Ferrous Target

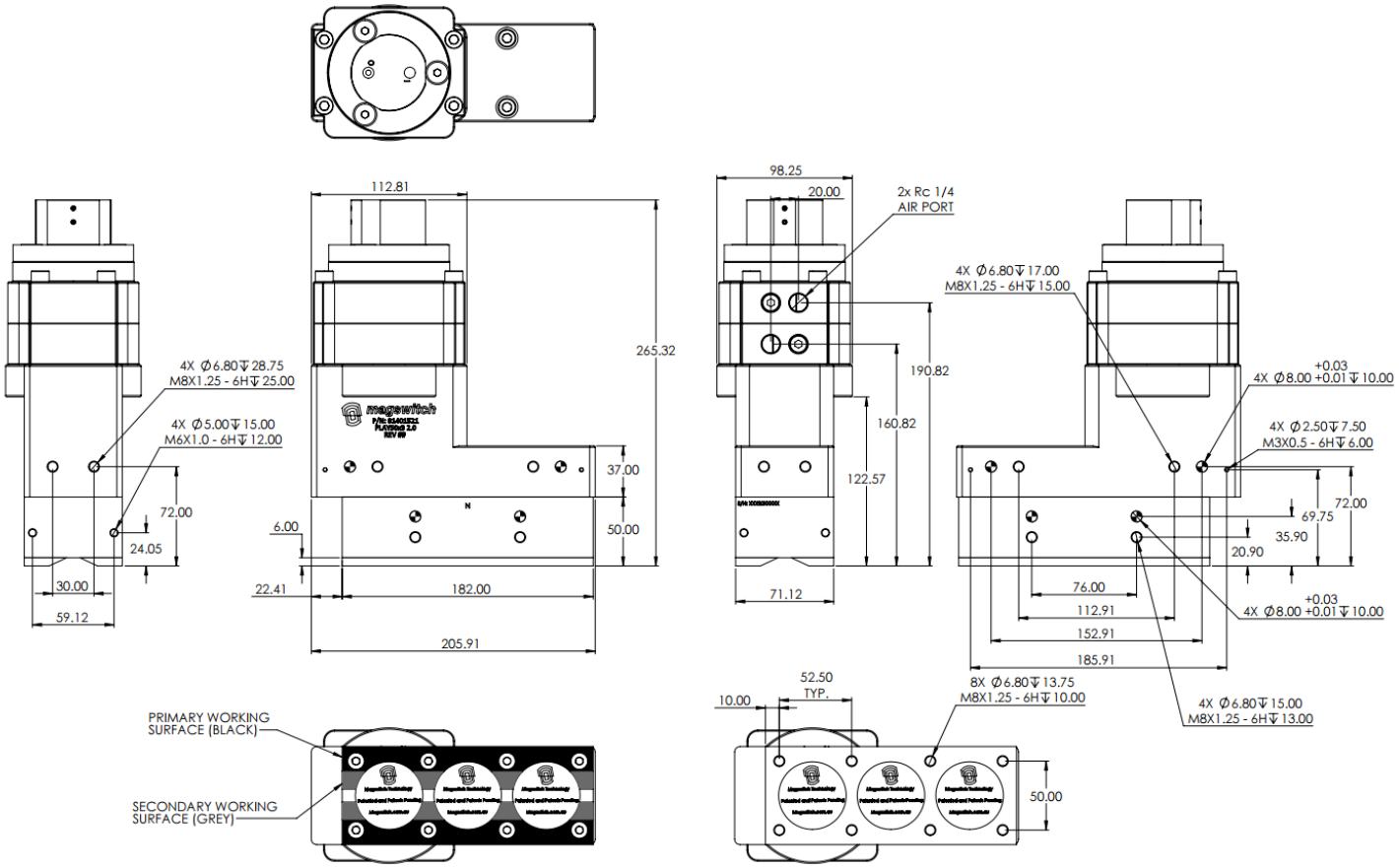

Center of Mass

