MAGSWITCH PLAY70X3 2.0
P/N: 81401545
+ 1(303) 468.0662
magswitch.com

PLAY70X3 2.0 | P/N: 81401545

Summary

The Magswitch 2.0 LAY-series of magnetic grippers for robotic automation utilize magnets arranged in a linear array to extend the depth and footprint of the magnetic field. The larger footprint of the array magnets provide stability for large end effectors and workpieces. With the ability to add custom pole shoes, the LAY magnets can be used with many different part profiles. The LAY 2.0 tools are strong, robust, and a perfect material handling solution for handling pipe, tubes and plate steel.

Specifications

Maximum Breakaway Force [1,2,4]	13232	N		
Maximum Shear [1,2,4]	3139	N		
Minimum Thickness for De-Stack [3]	0.5	in	12.7	mm
Overall Height (Max)	11.8	in	300.5	mm
Overall Length	11.2	in	285.6	mm
Overall Width	4.9	in	125.0	mm
Net Weight	45.19	lbs	20.5	kg
Magnetic Pole Footprint	3.8x10.0	in	97.6x255	mm
Max Allowable Pressure	145	psi	1.00	MPa
Air Port Threads	Rc 1/4			

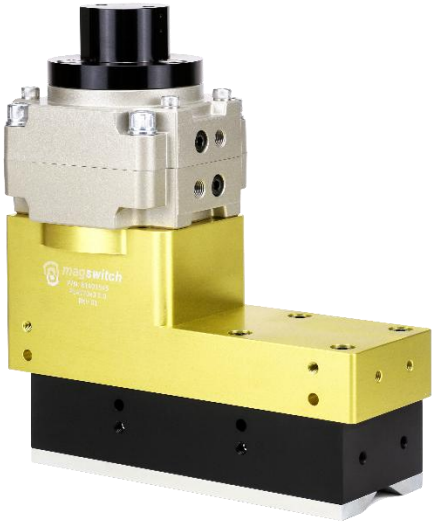

Material Thickness - mm (in)	1.5 (0.059)	1.9 (0.075)	2.7 (0.106)	3 (0.118)	3.5 (0.138)	4.76 (0.187)	6.35 (0.250)	9.53 (0.375)	12.7 (0.500)	19.05 (0.750)	50 (1.969)
Maximum Force [5] (N)	1268	1875	2781	3283	3614	5234	7690	10498	11505	13228	13232
Required Air Pressure - bar (psi)	3.4 (50)	3.1 (45)	2.9 (42)	2.9 (42)	2.8 (40)	2.4 (35)	2.4 (35)	2.4 (35)	2.1 (30)	2.1 (30)	2.1 (30)

[1] Determined in laboratory environment on 2" thick SAE1018 Steel with surface roughness 63 micro inches. Many factors contribute to the actual breakaway force and safe working load in each application. Consult a Magswitch Applications Engineer and test the Magswitch in each application before deployment.

[2] All data applies to standard tool.

[3] Determined with SAE1018 Steel L=200mm W=200mm.

[4] Values may vary by +/- 5%.

[5] Maximum forces listed above are not safe lifting forces. Designer must take into account safety factor when specifying tool. Magswitch recommends SWL = 5:1 for most applications.

$$SWL\ (Safe\ Working\ Load) = \frac{Maximum\ Force^{5}}{Safety\ Factor\ (\geq 5)}$$

Pole shoes required for operation

Standard kits available:

Flat Pole Shoe Kit (Included)	8800078
135Deg V Pole Shoe Kit	88001709
155Deg V Pole Shoe Kit	88001710
Flat w/ Teeth Pole Shoe Kit	88001711

WARNING!
Do Not Operate Unless In Contact With Ferrous Target

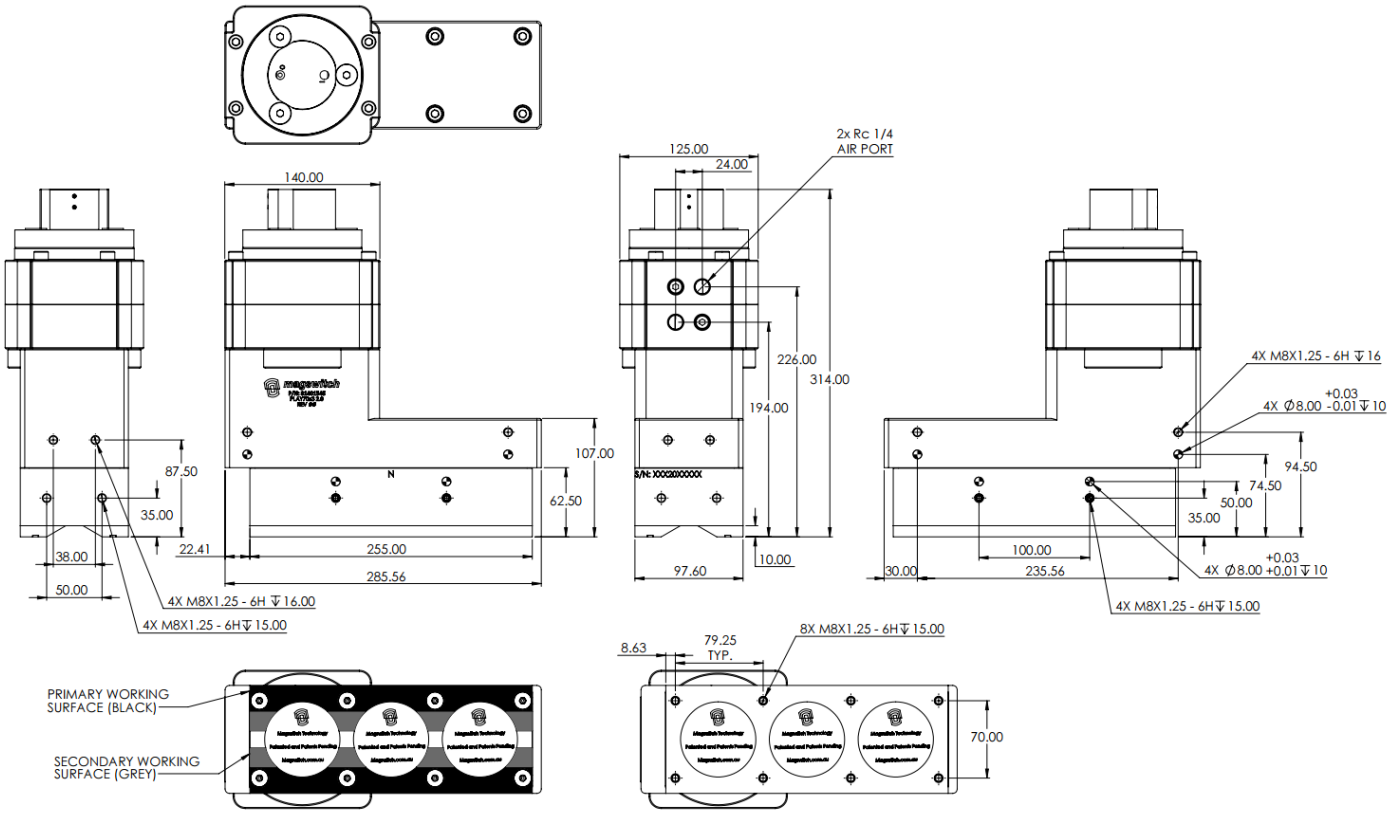

Center of Mass

